CDXL-60

USHIO

Technical Information
No.0906①

Technical data

Rated Input Power		W	6000
Rated Current		A	155
Useful Power Range		A	105－165
Rated Voltage		V	39
Cold Arc Gap		mm	8
Lamp Length (L1)		mm	417
Lamp Length (L2)		mm	381
LCL (3)		mm	165.5
Bulb Diameter		mm	φ70
Base Diameter		mm	φ30
Cathode pin Diameter		mm	M14×1.5
Anode pin Diameter		mm	φ14
Cable length		mm	—
Vertical		°	—
Horizontal		°	±5°
Operating Position	Base Surface Temperature	℃	200℃MAX
	Forced Air Cooling	m/s	10－13

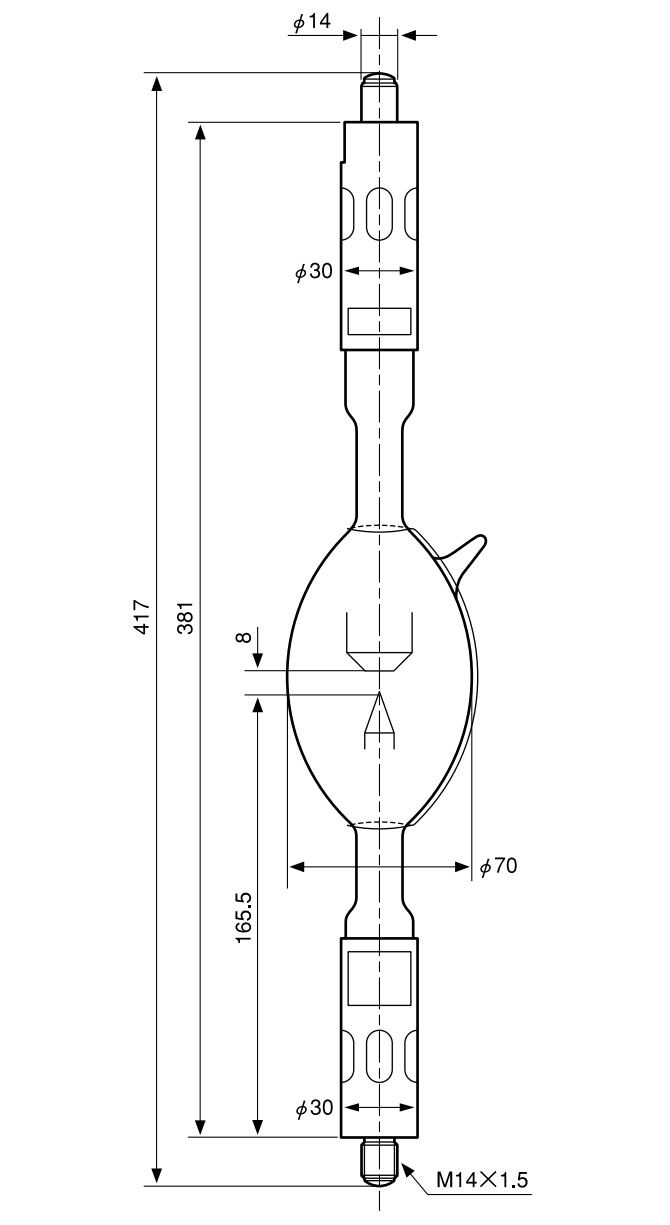

Memo